DIMNS MARKED DENOTES (S) SAFETY/REGULATION (F) CRITICAL FIT/FUNCTION (M) MAJOR FIT/FUNCTION (M2) MINOR FIT/FUNCTION

Ø'C'	AFTER POST CHROME GRINDING Cr(µm) (M)	PLATING THICKNESS		FINISH GRIND (Ø)	CHROME HARDNESS (per 50 g LOAD) (M)
		Ni(µm)	Cr(µm)		
Ø10.960–10.986	13±3µm	13±3 µm	15±3 µm	Ø10.916–10.926	800 HV MIN.

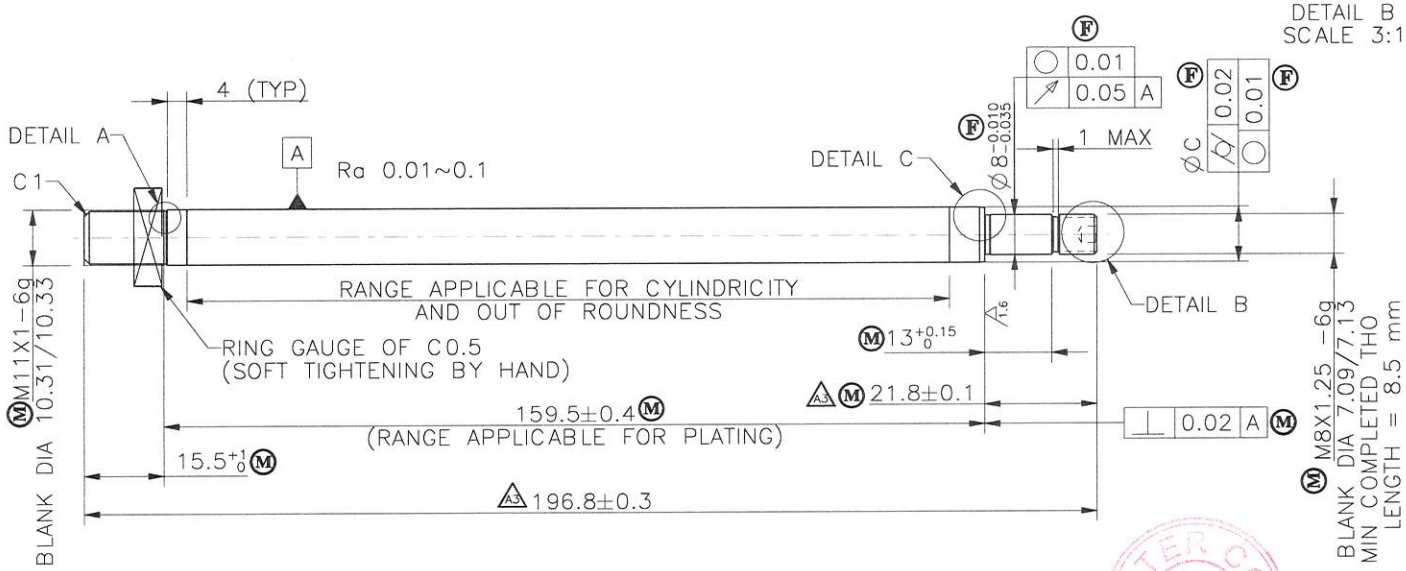

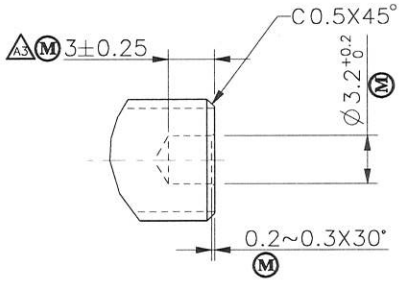

DETAIL B
SCALE 3:1

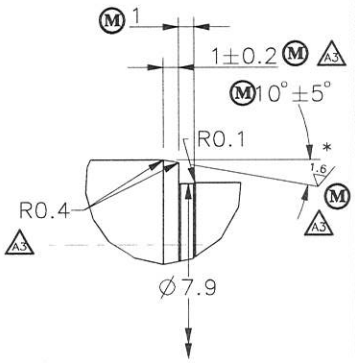

DETAIL C
SCALE 3:1
(PROFILE AFTER FINISH GRINDING)

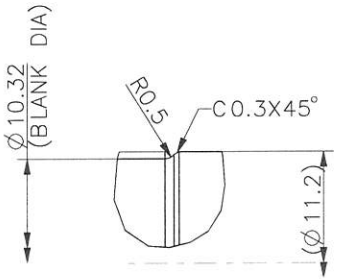

DETAIL A
SCALE 4:1
PROFILE AT MACHINING STAGE

MASTER COPY ONLY IF RED

NOTES:–

1a. TO BE GROUND TO FINISH SIZE AFTER PLATING . MATERIAL REMOVAL 3~5 µ ON DIAMETER.

1b. BASED ON DIAMETER MINIMUM 3 GROUPING TO BE DONE BEFORE POST CHROME GRINDING.

(M) 2. MUST BE NO CHATTER, SCRATCH, ABRASION, AND BRUISE ON SURFACE OF Ø8.

(M) 3. MUST BE FREE FROM PINHOLE, ROUGH SURFACE AND BLISTER AFTER PLATING.

4. PARTING PIP NOT PERMITTED.

(F) 5a. CORROSION RESISTANCE TEST: UP TO 48Hrs CASS TEST, RATING NO.9 MIN.

5b. PLATING VALIDATION: CORROSION TEST AS MENTIONED, OTHER PARAMETERS AS PER GSP0103.

(A3) 6. * MARKED SURFACE SHALL BE FREE FROM RING MARKS / NAIL FEEL MARKS, TO BE VERIFIED VISUALLY.

DATE	REV	ALTERATION	E.C.N.NO
25.11.2021	A3	196.8±0.3 WAS (197.5), 21.8 WAS 22.5, ADDED NOTE 6, R0.4 WAS R0.2, 1±0.2 WAS 1±0.5, 3.25 WAS 3	389-04
20.10.18	A2	RELEASE FOR OTS	389-03
6.10.18	A1	COSTING & FEASIBILITY STUDY	
22.06.18	D1	RELEASE FOR OTS	389-2
25.04.17	D0	RELEASE FOR ROTO	389-1

SUPERSEDES :

GENERAL TOLERANCE ASPER : –

DESIGN SOURCE REF.

RELEASE FOR: ☐ COSTING ☐ PROTOTYPE ■ OTS ☐ PRE-PRODUCTION ☐ PRODUCTION

GABRIEL INDIA LTD.

SCALE	SHEETS	FINISH:	MASS:
1:1	1 / 1	NICKEL HARD CHROME	137 g

DRAWN BY: NAGARAJAN — DATE: 25.11.2021

CHECKED BY: VRISHALI — DATE: 25.11.2021

APPROVED BY: DIWAKAR — DATE: 25.11.2021

NAME:– METROPOLIS REAR PISTON ROD

MATERIAL:– BAR 3404010-AS PER GIL SPEC - GP136-5

PART NO:– 114040084 REV. A3

ALL DIMENSIONS ARE IN MM. | NO MANUAL ALTERATION | DO NOT SCALE | IF IN DOUBT PLEASE ASK | SIZE : A3

CONFIDENTIAL: THIS DRAWING AND THE INFORMATION THEREIN ARE THE PROPERTY OF GABRIEL INDIA LTD., AND SHALL NOT BE REPRODUCED, COPIED RECORDED IN ANY MEDIA, USED FOR ANY OTHER PURPOSE OR DELIVERED AND/OR DISCLOSED TO ANY THIRD PARTY WITHOUT WRITTEN CONSENT OF GABRIEL.